Indonesian Journal of Electrical Engineering and Computer Science
Vol. 43, No. 3, September 2026, pp. 780~791
ISSN: 2502-4752, DOI: 10.11591/ijeecs.v43.i3.pp780-791

Deep learning–driven automated prediction and data analysis of the Indian stock index

Vijaykumar Bidve[1], Ketki Kshirsagar[2], Jayashree Tamkhade[2], Sunil Sangve[3], Geetha R Chillarge[4], Aryani Gangadhara[5], Shailesh Kediya[6], Priyanka Paygude[7]
[1]School of Computer Science and Information Technology, Symbiosis Skills and Professional University, Pune, India
[2]Department of Electronics and Telecommunication,
Bansilal Ramnath Agarwal Charitable Trust's Vishwakarma Institute of Information Technology, Pune, India
[3]Department of Artificial Intelligence and Data Science, Vishwakarma Institute of Technology, Pune, India
[4]Department of Computer Engineering, Marathwada Mitra Mandal's College of Engineering, Pune, India
[5]Department of First Year Engineering, D. Y. Patil College of Engineering, Pune, India
[6]School of Logistics and Supply Chain Management, Symbiosis Skills and Professional University, Pune, India
[7]Department of Information Technology, Bharati Vidyapeeth (Deemed to be University), College of Engineering, Pune, India

Article Info

Article history:

Received Oct 21, 2024
Revised Jul 13, 2026
Accepted Aug 19, 2026

Keywords:

Data analysis
Data integration
Deep learning
Prediction analysis
Stock index

ABSTRACT

This study focuses on the Indian stock index (NIFTY50), employing advanced deep learning methodologies to enhance predictive accuracy and support intelligent trading decisions. The research investigates the relationship between the volatility index (VIX) and NIFTY50, analyzing how fluctuations in VIX influence market direction and futures performance. By monitoring real-time variations in VIX during trading hours, the study aims to capture intraday volatility patterns and provide actionable insights for investors. To achieve this, the proposed framework leverages long short-term memory (LSTM) networks, a sophisticated deep learning technique well-suited for sequential data analysis and financial forecasting. The methodology encompasses data collection, preprocessing, feature engineering, and the design of an LSTM-based predictive model, followed by rigorous evaluation and back-testing. Experimental results demonstrate the effectiveness of the approach in forecasting NIFTY50 movements, highlighting the potential of LSTM networks to outperform traditional statistical and machine learning models. The findings contribute to the growing body of research on AI-driven financial prediction, offering a paradigm shift in the application of deep learning for stock market analysis and paving the way for more reliable, automated decision-making in investment strategies.

This is an open access article under the CC BY-SA license.



Corresponding Author:

Vijaykumar Bidve
School of Computer Science and Information Technology, Symbiosis Skills and Professional University
Pune, India
Email: vijay.bidve@gmail.com

1. INTRODUCTION

Financial markets are dynamic systems characterized by ever-changing and complex trends that continue to attract the attention of both investors and researchers. Within this context, the Indian stock index NIFTY50 serves as a critical benchmark of economic strength and market sentiment in the country [1], [2]. Accurately predicting its movements remains a formidable challenge, yet it is essential for informed decision-making in investment and economic planning. Traditional market analysis methods, while useful, often struggle to capture the nuances of market behavior, particularly under volatile and uncertain conditions.

Consequently, the integration of deep learning methodologies has emerged as a transformative approach, offering enhanced predictive capabilities in financial analytics [3].

This research harnesses the power of long short-term memory (LSTM) networks to forecast NIFTY50 trends by leveraging the volatility index (VIX), a widely recognized measure of market volatility and investor sentiment [4]. The primary objective is to exploit the predictive strength of LSTM models to anticipate changes in NIFTY50 by observing VIX values. Beyond long-term forecasting, the study extends to intraday predictions, capturing sudden fluctuations in VIX during trading hours to forecast short-term volatility in NIFTY50 futures [5], [6]. By employing advanced deep learning techniques, this work not only improves forecast accuracy but also reshapes the decision-making process in financial investments, offering promising prospects for automated trading systems [7], [8].

Predicting financial market behavior has long been a central theme in economic research. Traditional approaches, including statistical models and performance indicators, provide valuable insights but often fall short in capturing the complexity of market dynamics. In recent years, the adoption of deep learning techniques has gained momentum due to their ability to model sequential dependencies and uncover hidden patterns in large-scale financial data [9], [10].

This study seeks to bridge existing gaps by investigating the predictive ability of LSTM networks within the framework of NIFTY50, using VIX as a benchmark. The research contributes to the expanding body of work at the intersection of deep learning and financial markets, emphasizing LSTM's advantages in capturing temporal dependencies and the unique properties of VIX in measuring volatility. While prior studies have demonstrated the effectiveness of deep learning in stock price prediction, challenges remain regarding data stability, interpretability, and immediate application. Future research should address these limitations to further enhance the accuracy, transparency, and practical utility of deep learning models in the Indian financial market [11].

2. METHOD

2.1. Literature review

Many studies examine the values of the volatility index (VIX) in different stock markets worldwide. "This study was carried out by Andersen *et al.* [1] and Sunny *et al.* [12], which has a strong correlation with the S&P 500 index, as an essential indicator of market sentiment and volatility." When we extend this understanding to other indices like NIFTY FIFTY for the Indian stock market, there is an excellent way to make predictions. Recent research shows that LSTM networks have successfully applied to stock market predictions. The LSTM model predicts market prices by combining present and historical price data, which performs better than traditional methods. However, some studies specifically focus on forecasting NIFTY50 trends based on VIX using LSTM networks in the context of the Indian stock market [13], [14]. Deep learning methods, primarily short-term temporal (LSTM) networks, have successfully captured temporal and sequential patterns in time records. For example, work by Hochreiter and Schmidhuber introduced LSTM networks. It showed that they can overcome the limitations of neural networks like recurrent neural networks (RNNs) in capturing long-term residents and that these networks are particularly suitable for economic forecasting [15].

Selvamuthu *et al.* [16] discussed Indian stock analysis by neural network using three different algorithms for 15 min data. They commented on 99.9% accuracy for tick data analysis of Indian stock companies. Zahra *et al.* [17] propose stock prediction using linear and non-linear methods for forecasting. They analyze NIFTY 50 stocks using RNN, LSTM, and convolution neural networks. Authors have commented more on RNN and convolutional natural networks than LSTM. Reddy [18] proposes a SAS system for data prediction for the time series model. The paper focuses more on the national stock exchange (NSE)-NIFTY risk ventures by FORCAST and autoregressive integrated moving average (AIRMA) process. Daniali *et al.* [19] proposed a VIX index prediction technique using deep learning and convolution probability. They used technical indicators and economic indexes for experimentation and rectified high precision, resulting in accuracy.

Prasad and Bakhshi [20] discussed the role of the volatility index in prediction in the Indian economy. The authors propose machine learning classifiers like regression and other related techniques for the prediction of the volatility index in the Indian economy. They propose this new technique for risk reduction. Gong *et al.* [21] used a consolidated uncertainty index based on the predictable principal component analysis method. The author designed two models, one for error prediction and the second for a composite index delivery. Pushpalatha *et al.* [22] are researchers on the Indian stock market volatility and some stock companies. They effectively observe NSE Nifty and NIFTY 50 selected companies to determine their financial effectiveness and predict the future of the stock market.

Srivastava *et al.* [23] prepared a model that reduces investor loss by using the LSTM machine learning approach. This approach analyses time series stock market data and reduces root mean square error.

Nayak *et al.* [24] approached the COVID-19 effect on the Indian Index and stock market using the LSTM deep learning method. It also analyzed the Indian Index and stocks during COVID-19 and a comparative approach. Table 1 discusses the review analysis of the similar previous experimentation conducted.

Table 1. Review analysis

Authors	Issue focuses on	Methodology used for experimentation	Comment on experimentation
Andersen *et al.* [1]	Integration in high frequency Intraday returns	Vector autoregression	Accest pricing, allocation and risk management practical model developed which shows prominent result for volatility and correlation.
Thenmozhi and Chandra [2]	Time strategy for VIX and market returns	Time strategy	VIX switches to mid/large cap it gives positive returns.
Srinivasan and Vasudevan [3]	Relation between VIX and stock return value	Regression	Volatility increases risk returns also increases depends on sentiments of investors.
Skidopoulos [4]	Volatiity index for greek market	Non linear vector auto regression	Analysis data by using GVIX method.
Dennis *et al.* [5]	Volatility in daily stock return and innovations in systematic volatility	General comparison	Volatility in daily stock return and innovations in systematic volatility relation is non zero.
Akita *et al.* [11]	Stock prediction for max profit and min loss	Deep learning	It gives best prediction for stock benifiers.
Sunny *et al.* [12]	Stock price prediction	RNN,LSTM, Bi-directional LSTM	Increased number of epoch increase better prediction.
Abdelkawy *et al.* [14]	Automatic stock prediction of american	Reinforcement learning	Model shows huge data prediction in few minutes using multi core machine.
Zahra *et al.* [17]	Indian time series analysis and stock exchange	RNN, LSTM, CNN	LSTM is more appropriate method to find more error gap in stock prediction.
Srivastava *et al.* [23]	Predication depend on historical closing values	AI, deep learning	Reduces major root mean square error by using AI and deep learning methods.

The literature review leads to the conclusion that the prediction of the Indian stock market is a highly volatile, sentimental, and risky issue. However, it is a pressing need for the community to have accurate prediction solutions. Deep learning emerges as the most prominent approach to analyzing vast historical data, despite its time-consuming nature due to the sentimental issue. Therefore, our primary prediction solution lies in the use of deep learning algorithms like LSTM, RNN, artificial neural network (ANN), regression, etc. In this research the urgency and an importance of accurate prediction solutions are driving force. In addition to LSTM for financial forecasting and analysis, many other deep learning methods can be considered in the previous work, as described below.

Convolutional neural network (CNN): CNN in image recognition performance. In this case, they can also fit financial time series data by transforming the input data into images or using an integrated method to capture patterns in the file sequence. Other than financial time series CNN used in many other applications. Gated recurrent unit (GRU): Similar to LSTM and GRU is a CNN (RNN) intended to process given sequential data. Their models are simpler in design than LSTMs, but can sometimes be learned faster and perform better with less input. Autoencoders: Autoencoders are used to reduce size and reduce custom training. They can help extract important details by expanding and restructuring financial information into a low-dimensional representation. Deep belief network (DBN): DBN is a model built from multiple random network layers with hidden variables. They are used in unsupervised academic activities and are capable of capturing complex patterns in financial times. Generative adversarial network (GAN): There are two neural networks in a GAN. working together, one generating data and the other separating real data from generated data. GANs show promise in generating global financial data and improving forecasting models.

These techniques have advantages and can be used in financial forecasting and analysis. Experimenting with different models and methods can provide a better understanding of market performance and increase the accuracy of forecasts. Tuning this model to fit the unique characteristics of financial information is crucial to achieving good results. The following are the reasons that many of the researchers concentrating on use of LSTM: Capturing long-term dependencies: Financial markets often exhibit long-range dependencies where past information influences future outcomes. LSTMs are designed to remember and utilize information over extended time intervals, making them effective in capturing such dependencies. Handling sequential data: Market data, including stock prices and indices like NIFTY FIFTY, is inherently sequential. LSTMs are specifically designed for sequential data processing, allowing them to understand patterns and relationships within these sequences.

Ability to learn complex patterns: LSTMs are equipped to learn intricate patterns and relationships within data. In financial markets, where various factors influence movements, LSTM's ability to capture these complex relationships can lead to more promising and accurate predictions. Handling data of variable length sequences: Financial data often comes in irregular time intervals or variable lengths. LSTMs are inherently capable of handling sequences of varying lengths, enabling flexibility in dealing with different time frames of market data. Reducing vanishing/exploding gradient problem: Gating mechanisms are employed by LSTMs to control the information flow within the network, addressing issues like vanishing or exploding gradients often encountered in deep networks.

Effective memory retention: LSTMs have a memory cell that can retain information over time and selectively decide what information to keep or forget, which is particularly beneficial in capturing relevant features from historical data. Robustness to noisy data: Financial data can be noisy and contain irregularities. LSTMs can learn from historical data and reduce the effects of noise; This makes them powerful in dealing with bad data. Due to the complexity of financial markets, LSTM's advantages in processing linked data, storing long-term expectations, and complex learning models are well suited for forecasting purpose. Prices NIFTY FIFTY are based on VIX directionality and intraday futures changes. While other techniques have advantages, LSTM's design suits the nature of real-time financial data, making it a good choice for this work.

2.2. Terminologies

2.2.1. VIX

The term VIX stands for the 'volatility index,' which tells us how much the market is expected to swing up or down in the upcoming year. It's like a gauge of how much uncertainty or fear there is in the market, so it's also called the 'Fear Index.' To calculate the VIX, people look at the prices of options for market index. VIX is then expressed as a percentage, showing the expected level of market volatility. So, essentially, it helps traders and investors figure out how shaky or calm the market is expected to be in the coming year.

2.2.2. India VIX (volatility index)

NSE introduced the 'India volatility index' in 2008 which represents the expected volatility of the Nifty over the year. This index helps the market participant get an idea about the general sentiment in the market. When the India VIX is rising, it means there is a rise in the degree of volatility in the market resulting in increased fear in the market. When the India VIX falls, it means there is a decrease in market volatility and an increase in market stability.

2.2.3. Correlation of India VIX and Nifty

India VIX is like a fear gauge for the stock market. When India's VIX goes up, it suggests more risk or uncertainty in the market. This usually leads to a decrease in stock prices. If India's VIX is high, there's a higher chance that the market might go downwards. So, in general, The Nifty index and the India VIX typically move against one another. When one goes up, the other often goes down. India VIX is like a fear meter for the stock market. If it goes up, there's more uncertainty, and the market might fall. This is because when people expect the market to drop, they buy specific options, increasing the VIX.

Usually, the VIX is expected to be low when the market is doing well and high when it's struggling. But sometimes, like in 2014, the market and VIX went up together during the general elections in India. This happened because when the market rises, some investors buy options, causing the VIX to increase. It's like a mix of fear and greed. So, in a nutshell, VIX reflects how scared or greedy people are in the stock market. A high VIX means more fear and uncertainty, suggesting the market might fall. On the other hand, low VIX means less fear, indicating the market could go up. If you see VIX decreasing, the market might go up because the fear is low. If the VIX is high, it's a signal that the market could go down because there's more fear and risk.

Figure 1 shows the history of India's VIX and Nifty50 indexes from 2013 to 2023. India's VIX is a volatility index that measures market expectations regarding volatility in the Nifty50 index over the year. A higher VIX in India indicates that the market expects more volatility soon. The Figure 1 shows that the India VIX index has a majorly negative correlation with the overall Nifty50 index. This means that when India's VIX rises, the Nifty50 tends to fall and vice versa. This is because investors often sell stocks and buy options with the expectation that volatility will increase. India's VIX has risen since early 2023, indicating that the market expects further volatility soon. Nifty50 index has followed a volatile course recently as a reflection of the uncertainty in the macroeconomic environment. The inverse relationship between India's VIX and the Nifty50 Index remains unchanged, indicating that investors are observing VIX to identify market volatility and sentiment. The rise in India's VIX Index shows investors are more cautious and expect more volatility soon. This could be due to many factors, including the ongoing war environment, rising inflation, and the possibility of an economic downturn in the United States. Investors need to consider the risks of investing in

volatile markets. Before practically deploying capital, they must identify and check their investment goal, time duration, and risk. Figure 1 provides an overview of the historical movements of India VIX and Nifty50 indices. The correlation between the two indicators suggests that investors can use India's VIX to gauge market volatility. However, investors must take calculated and affordable risks when investing in volatile markets. To figure out how much the Nifty stock index is expected to move in a month, you can use the VIX (volatility index) and a simple formula: divide the VIX by the square root of the annual term count, which is 12 (since there are 12 months in a year). If the VIX is 16.8025, you will divide that by the square root of 12, which is approximately 3.464. This gives you an expected monthly volatility for the Nifty of around 4.85%.

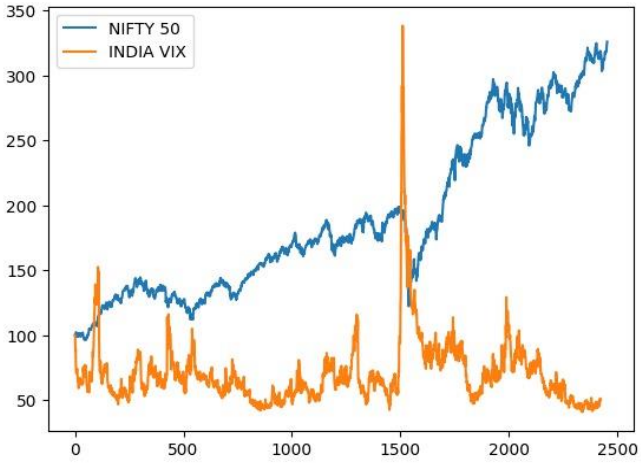

Figure 1. India VIX and Nifty movement

Table 2 shows the average relationship between NIFTY50 index returns and volatility in up or down markets. The correlation defines the relationship between the two variables given. The range is -1 to 1. A negative value of (-1) indicates a negative correlation and a positive value of (+1) indicates a positive correlation. The average correlation between the NIFTY50 index return and volatility when market volatility is -0.43. This indicates an average negative relationship between the two given variables. NIFTY50 index returns are negatively correlated with volatility when the market is up. The average correlation between the NIFTY50 index return and volatility when the market is down is -0.65. This predictable negative relationship between the two variables is a reassuring factor for market participants. During market downturns, NIFTY50 index returns consistently show a negative correlation with volatility, a trend that can be confidently anticipated. Table 2 also shows that the average relationship between NIFTY50 index returns and volatility is more substantial when the market is down than when the market is up.

Table 2. A dataset of the yearly relationship between VIX and NIFTY50

Years	Overall nifty50 movement	Index volatility	Return volatility	Coorelation	R-square
2009	Up move	727.06	2.17	-0.27	0.06
2010	Up move	421.03	1.04	-0.64	0.43
2011	Down move	349.91	1.22	-0.70	0.52
2012	Up move	301.01	0.98	-0.53	0.24
2013	Down move	226.98	1.12	-0.55	0.33
2014	Up move	787.11	0.82	-0.30	0.09
2015	Down move	347.88	1.03	-0.66	0.43
	Average relationship as NIFTY50 moves up				-0.42
	Average relationship as NIFTY50 moves down				-0.64

Automated prediction: VIX data values represent expected volatility and sentiment in the market. So, change in NIFTY50 can be predicated using data value VIX. These values are defined in terms of percentage. Let's consider that the VIX data value is 13.69, which implies that a change in Nifty50 in the upcoming year can be positive at 13.69 percent to move upside or downside. Similarly, using the same set of rules monthly or for any duration, fluctuation can be predicated, and this can be automated. VIX's current data must be collected to predict changes in NIFTY50 on a monthly or any given time basis. In this case,

it's 13.69, and t is 30 days for monthly prediction. The formula to calculate is VXI/Sqrt (365/30). In this case, it's 13.69/sqrt (365/30), which gives a value of 3.86. it indicates that the change in Nifty50 will be upward or downward by 3.86 percent.

2.3. Methodology

Figure 2 displays the proposed model flow diagram for automated prediction and data analysis of the index Nifty50 Indian stock market. Figure 2 depicts a general overview of the utilized deep learning-based automated prediction and data analysis system for the Indian stock index (NIFTY50). The system includes the following critical components:

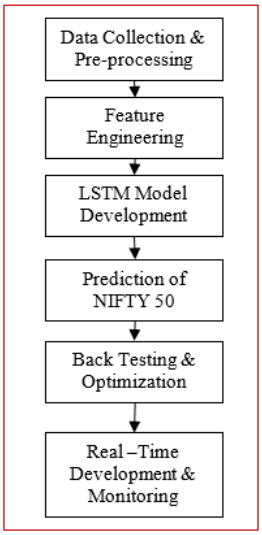

Figure 2. Flow diagram of proposed methodology

2.3.1. Data collection and pre-processing

The data collected for NIFTY FIFTY and volatility index (VIX) from trusted financial data sources. The first step is removing missing values, outliers, and inconsistencies from the datasets. The data is normalized, and the data is scaled to ensure uniformity for efficient model training. The collected data is organized into time series sequences, which are structured suitably for input into the LSTM model.

2.3.2. Feature engineering

After data gathering, the next step is to identify and extract relevant features that influence NIFTY50 conditionality based on VIX movement from the datasets. The work also explores lagged variables, technical indicators, and additional metrics to enhance the model's predictive capabilities through enriched features. This stage is crucial as it significantly improves the model's ability to make accurate predictions.

2.3.3. LSTM model development

The presented work applied LSTM neural network architecture for sequence prediction, considering input shape, layers, neurons, and activation functions. The LSTM model, a key component of this work, is trained using historical data. This work allocated a portion of the datasets for training and validation, with a separate test set for evaluation.

LSTM, created by Hochreiter and Schmidhuber, is a bit tricky to grasp because it's part of the complex world of deep learning. It specializes in figuring out patterns in data that come in a sequence, like time-ordered information. Think of LSTM as a chain with four small brain networks and memory blocks called cells. These cells are like sticky notes that can hold information for a long time. The trick is that three gates in the LSTM – like security guards – control how information gets in and out of these memory cells, helping the system manipulate and remember important things. The LSTM is like a cell with three important gates: forget, input, and output, as shown in Figure 3. These gates act as filters, helping the cell decide what information is crucial to remember and what can be discarded.

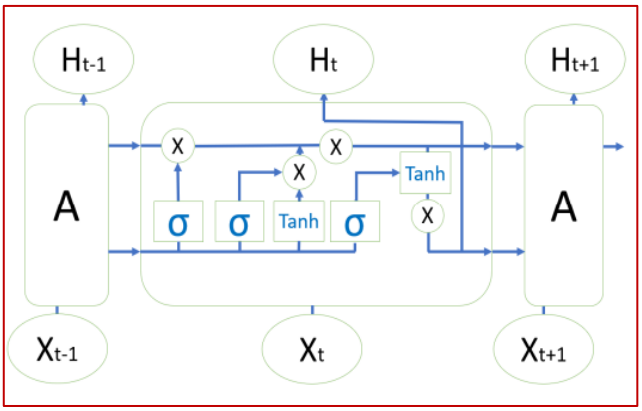

Figure 3. The repeating module in LSTM [12]

Inside the cell are two kinds of memory: Cell state and hidden state. These memories are like notes that carry information from the past to the present as the system processes data over time. The state of cells is like the "long-term" memory, holding onto essential details, while the hidden state is more like "short-term" memory, capturing the current situation. The forget gate in an LSTM plays a crucial role in deciding what details must be erased or ignored from the state of the cell. The forget gate takes two critical pieces of information - the previous historical time step's hidden state and available current input. This combined information then goes through a sigma activation function, a fancy way of saying a function that squashes the output between 0 and 1. The output of the activation function is a value between 0 and 1. If it's close to 0, the system forgets that information; if it's close to 1, it decides to keep it. The output of the forget gate at timestamp t is represented in (1).

$$f_t=\sigma(x_t * u_f + h_{t-1} * w_f) \quad (1)$$

Here are the equation variables:
x_t: Current date and time input,
h_{t-1}: Previous timestamp concealed state,
u_f: Input weight,
w_f: Weight matrix for hidden states.

The input gate, which can be likened to a gatekeeper, looks at two things - the given hidden state from the previously available time step and the current input. The first part (sigma activation) uses a sigma activation function, which can be compared to a filter, to decide how much of the information is important. The output is a value between 0 and 1, indicating the percentage of relevance, much like a percentage score in a test. The second part (tanh activation) has two values (currently available input and given hidden state), then goes through the Tanh activation function, which squashes the values between -1 and 1. The output of the sigma function decides what percentage of the information is significant, and the production of the Tanh function gives the actual information. These two are multiplied, giving a refined and relevant piece of information. Updating Cell State refined information becomes the input gate's output and is used to update the cell state. It's like deciding how much and what kind of new information is essential for the current state.

$$i_t=\sigma(x_t * u_i + h_{t-1} * w_i) \quad (2)$$

The output gate produces the hidden state for the next moment. There are two parts of output gate: The first part, sigma activation, functions similarly to other gates. It uses a Sigma function to determine the relevance of the data derived from the cell state, a crucial step for the next moment. Second part (tanh activation): The newly updated cell state goes through a Tanh activation function, which squashes the values between -1 and 1. Combining and updating hidden state: The output from the sigma function decides the percentage of relevance, and the output from the Tanh function is the actual information. These two are multiplied, creating a new hidden state. Output for the next time step: The final result of this multiplication becomes the new hidden state. This output is then known as a hidden state. For the currently available time step, it also serves as the secret state for the next one.

$$o_t=\sigma(x_t * u_o + h_{t-1} * w_0) \quad (3)$$

2.3.4. Prediction of NIFTY50

The trained LSTM model accurately predicted the direction of NIFTY FIFTY based on the directionality of the VIX, showcasing promising results. Performance evaluation: It is assessed the model's accuracy, precision, recall, and F1 score, validating its predictive performance with satisfactory metrics.

2.3.5. Intraday analysis

The analysis extended to predict changes in NIFTY50 futures during intraday periods using real-time VIX movements. Short-term fluctuation analysis: This work successfully evaluates the model's effectiveness in capturing short-term fluctuations and intraday trends.

2.3.6. Auto trading model integration

This work has integrated broker (Shoonya by Finvasia) APIs, allowing access to real-time NIFTY FIFTY and VIX data streams. Model implementation: This work will incorporate LSTM predictions into an auto trading model, facilitating real-time trading decisions based on accurate forecasts.

2.3.7. Backtesting and optimization:

Evaluating the trading model's performance is crucial, and a thorough examination can be done through backtesting using historical data. This process provides insights into how the model responds to different market conditions. After obtaining the performance results, the next step is to improve and optimize the model. This includes fine-tuning parameters, adjusting trading strategies, and refining risk management protocols. This critical step aims to enhance the effectiveness of the model based on the lessons learned during the backtesting process.

2.3.8. Real-time deployment and monitoring

With improvements to the model, the subsequent action involves launching it into an active trading environment. Deploying the optimized auto trading model and establishing continuous monitoring mechanisms is essential. This setup enables us to observe its real-time performance closely.

Shoonya by Finvasia - This work uses Shoonya, a powerful application programming interface (API) provided by Finvasia, to integrate and access business data in real-time. Shoonya is a reliable gateway that allows us to access Finvasia's available market data. Instantaneous business data, timely analysis, and choice-making. Leveraging the power of Shoonya, this project seamlessly integrates with Finvasia's API, allowing the use of automated trading strategies guided by these predictive models. Integrating Shoonya API enables the project to allow Finvasia to store its APIs and trade data and improve decision-making. Finvasia's Shoonya simplifies integration, allowing us to use predictive models in a real-time business environment and make good decisions based on instant insights. Shoonya's API helped us support data in Excel, streamline and improve the data processing, and achieve real-time efficiency and analysis of market and company data. Integrating Shoonya's API allows us to dynamically export data to Excel, perform real-time calculations, see trends, and track the forecasting model seamlessly. It drives decision-making, accelerates response to changes in the business, and enhances the predictive analytics. Shoonya's dashboard for automated trading of this work provides a comprehensive overview of the trading and performance. It allows us to instantly track orders, positions, assets and margins. This work can also view market data and market trends and create market signals using multiple strategies. The dashboard also provides access to a variety of tools to manage risk and optimize business performance.

3. RESULTS AND DISCUSSION

Following appropriate scaling, training, and testing with actual and predicted data, It is noticed diverse RMSE values associated with variations in layers, units in dense and hidden layers, as well as various output prediction epochs. Upon scrutinizing various epochs for both the LSTM models, it became evident that selecting the optimal training epochs is crucial for effectively training the model. This emphasizes the importance of choosing the most suitable training epochs to ensure optimal model training.

Figures 4 and 5 shows the actual value of NIFTY50 in the last 100 days and also the forecast of NIFTY50 in the next 10 days. As you can see, the model predicts the overall pattern of the NIFTY50 very well, but there is some day-to-day variation in the details. As shown in Figure 6, the LSTM model with two hidden layers could accurately predict the trend of the NIFTY50 index over 100 epochs. The predicted values closely track the actual values, with only minor discrepancies. This suggests that the given model can learn the available underlying patterns in the data set and make more accurate predictions.

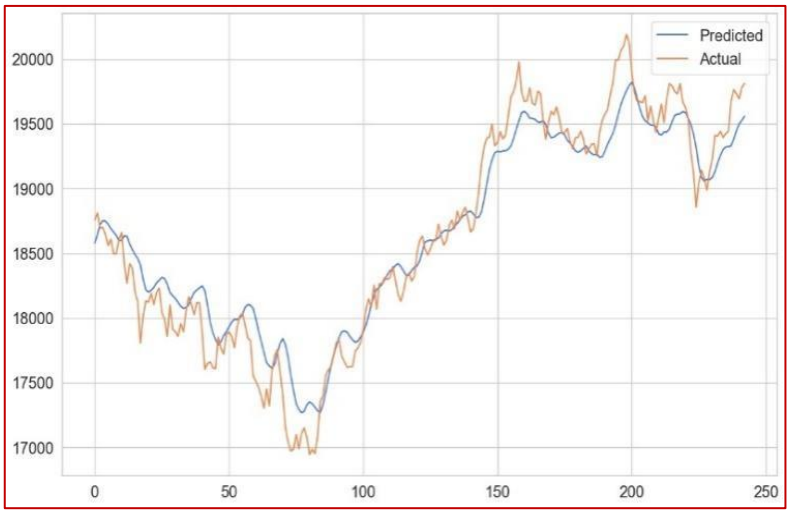

Figure 4. LSTM methodologies output prediction for fifty epochs with two hidden layers



Figure 5. LSTM model's output prediction for 100 epochs with two hidden layers

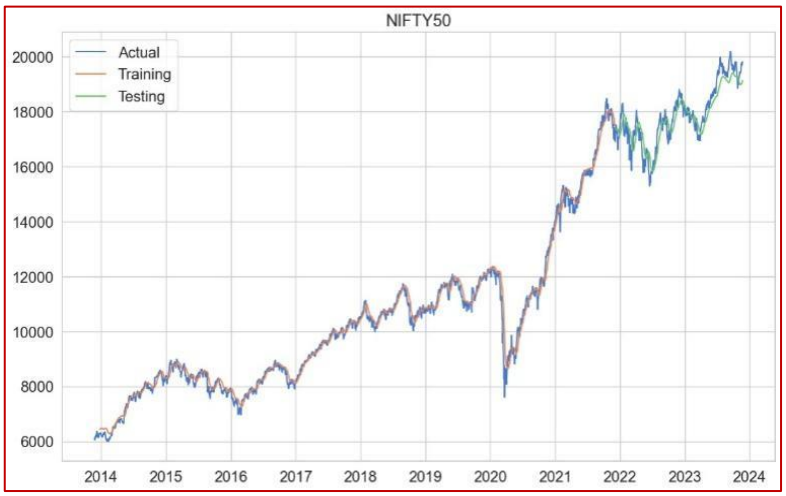

Figure 6. LSTM model's output prediction for 50 epochs with two hidden layers

The model's performance can be attributed to its robust learning capacity, particularly in capturing long-term data dependencies. RNNs, such as LSTMs, are generally more suited for time series prediction tasks, as they can learn to predict future values based on available past data values. The two hidden layers in the model provide additional capacity for learning complex patterns in the data, reassuring the audience about its predictive accuracy.

4. CONCLUSION

This study demonstrates the effectiveness of LSTM networks in predicting NIFTY50 trends by leveraging the volatility index (VIX) as a key indicator of market sentiment and volatility. By integrating predictive analytics with real-time data, the proposed framework enhances forecasting accuracy and provides valuable insights for automated financial decision-making. The ability of LSTM models to capture sequential dependencies and complex temporal patterns makes them particularly well-suited for financial applications where volatility and uncertainty dominate. The results highlight that model optimization strategies and robust data preprocessing collectively strengthen the reliability of predictions, enabling more practical applications in real-world trading environments. Beyond improving forecast accuracy, the approach contributes to the development of intelligent, automated systems that can support investors in making timely and informed decisions. This research underscores the potential of deep learning methodologies, particularly LSTM, to transform financial prediction and analysis, paving the way for scalable, adaptive, and data-driven solutions in the Indian stock market.

ACKNOWLEDGEMENTS

The authors acknowledge to all who supported directly or indirectly in the accomplishment of this work. Authors are grateful to the parents for their blessing and family members, friends and colleagues for their best wishes for this work. Authors extend special thanks to employers for their huge support all the time in all of research work.

REFERENCES

[1] T. G. Andersen, T. Bollerslev, F. X. Diebold, and P. Labys, "Modeling and forecasting realized volatility," *Econometrica*, vol. 71, no. 2, pp. 579–625, 2003, doi: 10.1111/1468-0262.00418.

[2] M. Thenmozhi and A. Chandra, "India volatility index (India VIX) and risk management in the indian stock market," *NSE Working Paper Series*, pp. 1–50, 2013, [Online]. Available: http://www.nseindia.com/research/content/res_WorkingPaper9.pdf.

[3] P. Srinivasan and R. D. Vasudevan, "Linkage between India implied volatility index and stock index returns," *Theoretical Economics Letters*, vol. 07, no. 04, pp. 929–938, 2017, doi: 10.4236/tel.2017.74063.

[4] G. Skiadopoulos, "The greek implied volatility index: construction and properties," *Applied Financial Economics*, vol. 14, no. 16, pp. 1187–1196, 2004, doi: 10.1080/0960310042000280438.

[5] P. Dennis, S. Mayhew, and C. Stivers, "Stock returns, implied volatility innovations, and the asymmetric volatility phenomenon," *Journal of Financial and Quantitative Analysis*, vol. 41, no. 2, pp. 381–406, 2006, doi: 10.1017/S0022109000002118.

[6] K. A. Althelaya, E. S. M. El-Alfy, and S. Mohammed, "Evaluation of bidirectional LSTM for short and long-term stock market prediction," in *2018 9th International Conference on Information and Communication Systems, ICICS 2018*, IEEE, Apr. 2018, pp. 151–156, doi: 10.1109/IACS.2018.8355458.

[7] R. C. Staudemeyer and E. R. Morris, "Understanding LSTM -- a tutorial into long short-term memory recurrent neural networks," Sep. 2019, [Online]. Available: http://arxiv.org/abs/1909.09586.

[8] S. Hochreiter and J. Schmidhuber, "Long short-term memory," *Neural Computation*, vol. 9, no. 8, pp. 1735–1780, Nov. 1997, doi: 10.1162/neco.1997.9.8.1735.

[9] L. Di Persio and O. Honchar, "Analysis of recurrent neural networks for short-term energy load forecasting," in *AIP Conference Proceedings*, 2017, p. 1, doi: 10.1063/1.5012469.

[10] S. Amit, G. T., and M. Rao, "Inter-comparison of artificial neural network algorithms for time series forecasting: predicting Indian financial markets," *International Journal of Computer Applications*, vol. 162, no. 2, 2017, doi: 10.5120/ijca2017913249.

[11] R. Akita, A. Yoshihara, T. Matsubara, and K. Uehara, "Deep learning for stock prediction using numerical and textual information," in *2016 IEEE/ACIS 15th International Conference on Computer and Information Science, ICIS 2016 - Proceedings*, 2016, pp. 1–6, doi: 10.1109/ICIS.2016.7550882.

[12] M. A. I. Sunny, M. M. S. Maswood, and A. G. Alharbi, "Deep learning-based stock price prediction using LSTM and bi-directional LSTM model," in *2nd Novel Intelligent and Leading Emerging Sciences Conference, NILES 2020*, 2020, pp. 87–92, doi: 10.1109/NILES50944.2020.9257950.

[13] K. Chen, Y. Zhou, and F. Dai, "A LSTM-based method for stock returns prediction: a case study of China stock market," in *Proceedings - 2015 IEEE International Conference on Big Data, IEEE Big Data 2015*, 2015, pp. 2823–2824, doi: 10.1109/BigData.2015.7364089.

[14] R. AbdelKawy, W. M. Abdelmoez, and A. Shoukry, "A synchronous deep reinforcement learning model for automated multi-stock trading," *Progress in Artificial Intelligence*, vol. 10, no. 1, pp. 83–97, 2021, doi: 10.1007/s13748-020-00225-z.

[15] V. M. Yavorskiy, "Methods of analysis, visualization, forecast of financial, economic and marketing data by means of integration of google technologies and GitHub," in *CEUR Workshop Proceedings*, 2021, pp. 287–301.

[16] D. Selvamuthu, V. Kumar, and A. Mishra, "Indian stock market prediction using artificial neural networks on tick data," *Financial Innovation*, vol. 5, no. 1, pp. 1–12, 2019, doi: 10.1186/s40854-019-0131-7.

[17] F. Zahra, K. Zahra, and S. Lamjed Ben, "Stock market prediction of NIFTY 50 index applying machine learning techniques," *Applied Artificial Intelligence*, vol. 36, no. 1, pp. 1–24, 2022.

[18] B. S. Reddy, "Prediction of stock market indices - using SAS," in *Proceedings - 2010 2nd IEEE International Conference on Information and Financial Engineering, ICIFE 2010*, 2010, pp. 112–116, doi: 10.1109/ICIFE.2010.5609262.
[19] S. M. Daniali *et al.*, "Predicting volatility index according to technical index and economic indicators on the basis of deep learning algorithm," *Sustainability (Switzerland)*, vol. 13, no. 24, p. 14011, 2021, doi: 10.3390/su132414011.
[20] A. Prasad and P. Bakhshi, "Role of the global volatility indices in predicting the volatility index of the Indian economy," *Risks*, vol. 10, no. 12, p. 223, 2022, doi: 10.3390/risks10120223.
[21] X. Gong, W. Zhang, W. Xu, and Z. Li, "Uncertainty index and stock volatility prediction: evidence from international markets," *Financial Innovation*, vol. 8, no. 1, p. 57, 2022, doi: 10.1186/s40854-022-00361-6.
[22] M. Pushpalatha, J. Srinivasan, and G. Shanmugapriya, "A research on volatility in the Indian stock market with special reference to nifty and selected companies offinancial service sector of NSE of," *International Journal of Innovative Technology and Exploring Engineering*, vol. 8, no. 12S, pp. 541–544, Dec. 2019, doi: 10.35940/ijitee.L1135.10812S19.
[23] S. Srivastava, M. Pant, and V. Gupta, "Analysis and prediction of Indian stock market: a machine-learning approach," *International Journal of System Assurance Engineering and Management*, vol. 14, no. 4, pp. 1567–1585, 2023, doi: 10.1007/s13198-023-01934-z.
[24] J. Nayak, P. B. Dash, B. Naik, S. Mohapatra, and A. R. Routray, "Deep learning-based trend analysis on Indian stock market in COVID-19 Pandemic scenario and forecasting future financial drift," *Journal of The Institution of Engineers (India): Series B*, vol. 103, no. 5, pp. 1459–1478, 2022, doi: 10.1007/s40031-022-00762-2.

BIOGRAPHIES OF AUTHORS



Dr. Vijaykumar Bidve is associate professor at School of CSIT, Symbiosis Skills and Professional University, Kiwale, Pune, Maharashtra, India. He Holds a Ph.D. degree in Computer Science and Engineering with specialization in Software Engineering. His research areas are software engineering, machine learning, and cyber security. Dr Vijaykumar has published six patents. He has published more than 40 research articles in national and international journals. He is a life member of ISTE. He is working as an expert for various subjects. Also, he has worked as a reviewer for various conferences and journals. He can be contacted at email: vijay.bidve@gmail.com.



Dr. Ketki Kshirsagar is associate professor at Department of Electronics and Telecommunication Engineering, Vishwakarma Institute of Information Technology, Pune, India. Her research areas are video image processing, pattern recognition, computer vision, computer network, and IoT. She has published many research articles in national and international journals. She is a member of ISTE, IFERP. She is working as an expert for various subjects like pattern recognition, computer vision, computer network, and IoT. Also, she has been technical committee member of international journals and worked as a reviewer for various conferences and journals. She can be contacted at email: ketki.kshirsagar@viit.ac.in



Dr. Jayashree Tamkhade is assistant professor at Department of Telecommunication Engineering, Vishwakarma Institute of Information Technology, Pune, India. Her research areas are video processing, compression techniques, and VLSI. She has published many research articles in national and international journals. She is a member of IEEE, ISTE. She is working as an expert for various subjects like video processing, compression techniques, and VLSI. Also, she has been editor of international journals and worked as a reviewer for various conferences and journals. She can be contacted at email: jankarjr@gmail.com.



Dr. Sunil Sangve is working as professor in Department of Artificial Intelligence and Data Science at Vishwakarma Institute of Technology, Pune, Maharashtra, India. He has obtained Ph.D. degree in Computer Science and Engineering from Shri Guru Gobind Singhji Institute of Engineering and Technology affiliated to Swami Ramanand Teerth Marathwada University, Nanded, India. He has published more than 55 research papers in international/national journals/conferences and published 8 patents and 2 copyrights. He began his carrier in Industry and followed by academics as a lecturer in the Department of Computer Science and Engineering. He can be contacted at email: sunil.sangve@vit.edu.



Dr. Geetha R Chillarge is associate professor at Marathwada Mitra Mandal's College of Engineering, Pune, Maharashtra, India. She holds a Ph.D. degree in Computer and Information Sciences with specialization in Network Security. Her research areas are network security, machine learning, and cloud computing. Dr Geetha Chillarge has published three patents. She has published more than 25+ research articles in international journal/Conferences. She is a life member of ISTE. Also, she has worked as a reviewer for various conferences and journals. She can be contacted at email: geethasb@gmail.com.



Dr. Aryani Gangadhara, is associate professor at Department of Engineering Sciences, D.Y. Patil College of Engineering, Akurdi, Pune Maharashtra, India. A passionate teacher who believes in learning interdisciplinary skills with the basic foundation of Mathematics and Statistics. She is also Guest faculty at BITS-Pilani, WILP division. She holds a Ph.D. degree in Mathematics with specialization in HyperlatticeTheory. She has qualified SET and GATE. Her research areas are hyper lattice theory, time series analysis, machine learning, and deep learning. Dr. Aryani has published 11 research articles in national and international journals. She is Author of Book Discrete Mathematics, PTU. She is a life member of Indian Mathematical Society (IMS). She can be contacted at email: aryanimaths@gmail.com.



Dr. Shailesh Kediya is associate professor at Symbiosis Skills and Professional University, Kiwale, Pune, Maharashtra, India. He Holds a Ph.D. degree in Logistics Management. His research areas are innovative and disruptive technologies, Business Management. Dr Shailesh Kediya has awarded with 3 International patents and 4 national patents, awarded with 14 copyright and authored 11 books. He has published more than 50 research articles in national and international journals. He is a member of IEEE, SEBI and NISM. He is working as an expert for various subjects. Also, he has been editor of four international journals and worked as a reviewer for various conferences and journals. He can be contacted at email: kediya.shailesh@gmail.com.



Dr. Priyanka Paygude is associate professor in Information Technology Department of Bharati Vidyapeeth Deemed to be University's College of Engineering, Pune, India. She has obtaineded Ph.D. degree in Computer Engineering from Bharati Vidyapeeth Deemed to be University, Pune, India. Her research interests are in the cutting-edge fields of machine learning, deep learningand soft computing. Her research work has been published in several high impact journals and 3 Indian patents are published to her Credits. She can be contacted at email: pspaygude@bvucoep.edu.in or paigudepriyanka@gmail.com.